Eligibility Checklist for Expedited Solar Photovoltaic Permitting for One- and Two-Family Dwellings

GENERAL REQUIREMENTS

A.	System size is 10 kW AC CEC rating or less	☐ Y	☐ N
B.	The solar array is roof-mounted on one- or two-family dwelling or accessory structure	☐ Y	☐ N
C.	The solar panel/module arrays will not exceed the maximum legal building height	☐ Y	☐ N
D.	Solar system is utility interactive and without battery storage	☐ Y	☐ N
E.	Permit application is completed and attached	☐ Y	☐ N

ELECTRICAL REQUIREMENTS

A.	No more than four photovoltaic module strings are connected to each Maximum Power Point Tracking (MPPT) input where source circuit fusing is included in the inverter	☐ Y	☐ N
	1) No more than two strings per MPPT input where source circuit fusing is not included	☐ Y	☐ N
	2) Fuses (if needed) are rated to the series fuse rating of the PV module	☐ Y	☐ N
	3) No more than one noninverter-integrated DC combiner is utilized per inverter	☐ Y	☐ N
B.	For central inverter systems: No more than two inverters are utilized	☐ Y	☐ N
C.	The PV system is interconnected to a single-phase AC service panel of nominal 120/240 Vac with a bus bar rating of 225 A or less	☐ Y	☐ N
D.	The PV system is connected to the load side of the utility distribution equipment	☐ Y	☐ N
E.	A Solar PV Standard Plan and supporting documentation is completed and attached	☐ Y	☐ N

STRUCTURAL REQUIREMENTS

A.	A completed Structural Criteria and supporting documentation is attached (if required)	☐ Y	☐ N

FIRE SAFETY REQUIREMENTS

A.	Clear access pathways provided	☐ Y	☐ N
B.	Fire classification solar system is provided	☐ Y	☐ N
C.	All required markings and labels are provided	☐ Y	☐ N
D.	A diagram of the roof layout of all panels, modules, clear access pathways and approximate locations of electrical disconnecting means and roof access points is completed and attached	☐ Y	☐ N

Notes:

1. *These criteria are intended for expedited solar permitting process.*
2. *If any items are checked NO, revise design to fit within Eligibility Checklist, otherwise permit application may go through standard process.*

Submittal Requirements Bulletin – Solar Photovoltaic Installations 10 kW or Less in One- and Two-Family Dwellings

This information bulletin is published to guide applicants through a streamlined permitting process for solar photovoltaic (PV) projects 10 kW in size or smaller. This bulletin provides information about submittal requirements for plan review, required fees and inspections.

1. Approval Requirements

The following permit is required to install a solar PV system with a maximum power output of 10 kW or less:

a) Solar permit.

Planning review is required for solar PV installations of this size.
Fire Department approval is required for solar PV installations of this size.

2. Submittal Requirements

a) Completed permit application form.

b) Demonstrate compliance with the eligibility checklist for expedited permitting.

c) A completed Standard Electrical Plan. The standard plan may be used for proposed solar installations 10 kW in size or smaller.

d) A roof plan showing roof layout, PV panels and the following fire safety items: approximate location of roof access point, location of code-compliant access pathways, PV system fire classification and the locations of all required labels and markings. Examples of clear path access pathways are available in the State Fire Marshal Solar PV Installation Guide. http://osfm.fire.ca.gov/pdf/reports/solarphotovoltaicguideline.pdf.

e) Completed expedited Structural Criteria along with required documentation.

For non-qualifying systems, provide structural drawings and calculations stamped and signed by a California-licensed Civil or Structural Engineer, along with the following information:

- The type of roof covering and the number of roof coverings installed
- Type of roof framing, size of members and spacing
- Weight of panels, support locations and method of attachment
- Framing plan and details for any work necessary to strengthen the existing roof structure
- Site-specific structural calculations
- Where an approved racking system is used, provide documentation showing manufacture of the rack system, maximum allowable weight the system can support, attachment method to the roof or ground and product evaluation information or structural design for the rack system

3. Plan Review

Permit applications may be submitted to Building and Safety in person at 320 W. Newmark Ave., Monterey Park, CA 91754 or electronically through the following email BuildingPermitCounter@montereypark.ca.gov.

Permit applications utilizing standard plan may be approved "over the counter" at 320 W. Newmark Ave., Monterey Park, CA 91754. Permit applications may also be submitted electronically for "over the counter" approval at the following email BuildingPermitCounter@montereypark.ca.gov.

Permits not approved "over the counter" should be reviewed in three business days.

4. Fees

Not to exceed $500.

5. Inspections

Once all permits to construct the solar installation have been issued and the system has been installed, it must be inspected before final approval is granted for the solar system. On-site inspections can be scheduled by contacting Building and Safety at (626) 307-1229; Planning at (626)307-1315; and Fire Prevention at (626)307-1308 or electronically at https://aca.accela.com/montereypark/. Inspection requests received prior to 4pm of a business day are typically scheduled for the next business day. If next business day is not available, inspection should happen within a five-day window.

Permit holders must be prepared to show conformance with all technical requirements in the field at the time of inspection. The inspector will verify that the installation is in conformance with applicable code requirements and with the approved plans.

The inspection checklist provides an overview of common points of inspection that the applicant should be prepared to show compliance.

6. Division of Building and Safety

For additional information regarding this permit process, please contact Building and Safety at BuildingPermitCounter@montereypark.ca.gov or at (626) 307-1300.

Solar PV Standard Plan – Simplified Central/String Inverter Systems for One- and Two-Family Dwellings

SCOPE: Use this plan ONLY for utility-interactive central/string inverter systems not exceeding a system AC inverter output rating of 10kW on the roof of a one- or two-family dwelling or accessory structure. The specific structural and fire requirements are covered in other parts of the California Solar Permitting Guidebook. The photovoltaic system must interconnect to the load side of a single-phase AC service panel of nominal 120/240Vac with a bus bar rating of 225A or less. This plan is not intended for bipolar systems, hybrid systems or systems that utilize storage batteries, charge controllers, trackers, more than two inverters or more than one DC combiner (noninverter-integrated) per inverter. Systems must be in compliance with current California Building Standards Codes and local amendments of the City of Monterey Park. Other Articles of the California Electrical Code (CEC) shall apply as specified in 690.3. Please contact Monterey Park Division of Building and Safety for systems beyond this scope or the criteria in this plan.

MANUFACTURER'S SPECIFICATION SHEETS MUST BE PROVIDED for proposed inverter, modules, combiner/junction boxes, racking systems, and rapid shutdown system or equipment. Installation instructions for bonding and grounding equipment and rapid shutdown systems shall be provided and may require additional details. Listed and labeled equipment shall be installed and used in accordance with any instructions included in the listing or labeling (CEC 110.3). Equipment intended for use with PV system shall be listed for the application (CEC 690.4[B]).

Job Address: _____ Permit #: _____

Contractor/ Engineer Name: _____ License # and Class: _____

Signature: _____ Date: _____ Phone Number: _____

Total # of Inverters installed: _____ (If more than one inverter, complete and attach the "Supplemental Calculation Sheets" and the "Load Center Calculations" if a new load center is to be used.)

Inverter 1 AC Output Power Rating: _____ Watts

Inverter 2 AC Output Power Rating (if applicable): _____ Watts

Combined Inverter Output Power Rating: _____ ≤ 10,000 Watts

Ambient Temperature Adjustment Factors: select the box for the expected lowest ambient temperature (T_L) with the corresponding Ambient Temperature Correction Factor (C_F):

☐ If T_L is greater than or equal to -5°C
,C_F = 1.12

☐ If T_L is between -6°C and -10°C

,C_F = 1.14

Average ambient high temperature (T_H) ≤ 47 °C

Note: For a lower T_L or a higher T_H, <u>this plan is not applicable</u>.

DC Information:

Module Manufacturer: _____	Model: _____
2) Module V_{oc} (from module nameplate): _____Volts	
3) Module I_{sc} (from module nameplate): _____Amps Is module I_{sc} below 9.6 Amps? ☐ Yes ☐ No (If No, this plan is not applicable.)	
4) Module DC output power under standard test conditions (STC) = _____ Watts (STC)	

5) DC Module Layout

Identify each source circuit (string) for inverter 1 shown on the roof plan with a Tag (e.g., A, B ,C…)	Number of modules per source circuit for inverter 1	Identify, by tag, which source circuits on the roof are to be paralleled (if none, put N/A)
		Combiner 1:
		Combiner 2:
Total number of source circuits for inverter 1:		

6) Are DC/DC Converters used? ☐ Yes ☐ No If No, skip to STEP 7. If Yes, enter info below.

DC/DC Converter Model #: _____Max DC	DC/DC Converter Max DC Input Voltage: _____Volts
Max DC Output Current: _____Amps Max	Max DC Output Voltage: _____Volts
# of DC/DC Converters in an Input Circuit: _____	DC/DC Converter Max DC Input Power: __ _____ Watts

7) Max. System DC Voltage – Use for systems without DC/DC converters.

Module V_{OC} (STEP 2) = _____ x # of modules in series (STEP 5) _____x C_F (STEP 1)_____ = _____ V

Table 1. Maximum Number of PV Modules in Series Based on Module Rated V_{oc} for 600 Vdc Rated Equipment (CEC 690.7)													
Max. Rated Module V_{oc} if C_F = 1.12 (Volts)	29.76	31.51	33.48	35.71	38.27	41.21	44.64	48.70	53.57	59.52	66.96	76.53	89.29
Max. Rated Module V_{oc} if C_F = 1.14 (Volts)	29.24	30.96	32.89	35.09	37.59	40.49	43.86	47.85	52.63	58.48	65.79	75.19	87.72
Max # of Modules for 600 Vdc	18	17	16	15	14	13	12	11	10	9	8	7	6

Use for systems DC/DC converters. The value calculated below must be less than DC/DC converter max DC input voltage (STEP 6).

Module V_{OC} (STEP 2)_____ x # of modules per converter (STEP 6)____x C_F (STEP 1)_____ = _____ V

Table 2. Largest Module V_{OC} for Single-Module DC/DC Converter Configurations (With 80V AFCI Cap) (CEC 690.7 and 690.11)																
Max. Rated Module V_{OC} if C_F = 1.12 (Volts)	30.4	33.0	35.7	38.4	41.1	43.8	46.4	49.1	51.8	54.5	57.1	59.8	62.5	65.2	67.9	70.5
Max. Rated Module V_{OC} If C_F = 1.14 (Volts)	29.8	32.5	35.1	37.7	40.4	43.0	45.6	48.2	50.9	53.5	56.1	58.8	61.4	64.0	66.7	69.3
DC/DC Converter Max DC Input (STEP 6) (Volts)	34	37	40	43	46	49	52	55	58	61	64	67	70	73	76	79

8) Maximum System DC Voltage from DC/DC Converters to Inverter – Only required if Yes in STEP 6
Maximum System DC Voltage = _____ Volts

9) Sizing Source Circuit Conductors
Source Circuit Conductor Size = Min. #10 AWG copper conductor, 90°C wet (USE-2, PV Wire, XHHW-2, THWN-2, RHW-2)
For up to 8 conductors in roof-mounted conduit exposed to sunlight at least ½" from the roof covering (CEC 310)
Note: For over 8 conductors in the conduit or mounting height of lower than ½" from the roof, this plan is not applicable.

10) Are PV source circuits combined prior to the inverter? ☐ Yes ☐ No
If No, use Single Line Diagram 1 and proceed to STEP 12.
If Yes, use Single Line Diagram 2 and proceed to STEP 11 after this step.

Is source circuit OCPD required? ☐ Yes ☐ No
Source circuit OCPD size (if needed): 15 Amps

Are the source circuits combined on the roof? ☐ Yes ☐ No
If "Yes", the DC output of the combiner must be a load break disconnecting means located in the combined or Within (6ft) of the combiner (CEC 690.15(C)).

11) Sizing PV Output Circuit Conductors
Sizing strings are combined (answered "Yes" in Step 10).
Output Circuit Conductor Size = Min. #6 AWG copper conductor

12) Inverter DC Disconnect
Does the inverter have an integrated DC disconnect? ☐ Yes ☐ No If yes, proceed to STEP 13.
If No, the external DC disconnect to be installed is rated for _____ Amps (DC) and _____Volts (DC)

13) Inverter information
Manufacturer: _____ Model: _____
Max. Continuous AC Output Current Rating: _____Amps
Integrated DC Arc-Fault Circuit Protection? ☐ Yes ☐ No (If No is selected, this plan is not applicable.)
Grounded or Ungrounded System: ☐ Grounded ☐ Ungrounded

AC Information:

14) Sizing Inverter Output Circuit Conductors and OCPD
Inverter Output OCPD rating = _____ Amps (Table 3)
Inverter Output Circuit Conductor Size = _____ AWG (Table 3)

Table 3. Minimum Inverter Output OCPD and Circuit Conductor Size									
Inverter Continuous Output Current Rating (Amps) (STEP 14)	12	16	20	24	28	32	36	40	48
Minimum OCPD Size (Amps)	15	20	25	30	35	40	45	50	60
Minimum Conductor Size (AWG, 75°C, Copper)	14	12	10	10	8	8	6	6	6

15) Point of Connection to Utility
Note: Only load side connections are permitted with this plan.
Is the PV OCPD positioned at the opposite end from input feeder location or main OCPD location?

☐ Yes, use Table 4, row 3 and circle the Max. Combined PV System OCPD(s) at 120% based on the busbar rating and main OCPD values.
☐ No, use Table 4, row 4 and circle the Max. Combined PV System OCPD(s) at 100% based on the busbar rating and main OCPD values.

Per 705.12(D)(2)(3): The value circled in Table 4 should be equal to or greater than the OCPD value selected from Table 3 (for a single inverter) or the OCPD value from Step S18 (for two inverters).

Table 4. Maximum Combined Supply OCPDs Based on Bus Bar Rating (Amps) per CEC 705.12(D)(2)(3)(b)									
Bus bar Rating	100	125	125	200	200	200	225	225	225
Main OCPD	100	100	125	150	175	200	175	200	225
Max Combined PV System OCPD(s) at 120% of Busbar Rating	20	50	25	60*	60*	40	60*	60*	45
Max Combined PV System OCPD(s) at 100% of Busbar Rating	0	25	0	50	25	0	50	25	0

*This value has been lowered to 60 A from the calculated value to reflect 10kW AC size maximum.

Reduction of the main breaker is not permitted with this plan.
Interconnection to center-fed panel boards may be permitted.

16) Rapid Shutdown

The rapid shutdown initiation device must be according to CEC 690.56(C), and its location must be shown on the site plan drawing. The rapid shutdown initiation device may be the inverter output or input circuits' disconnection means, the service main disconnect, or a separate device as approved by the Division of Building and Safety. The disconnecting means must be identified for the purpose, suitable for their environment, and listed as a disconnecting means. A single rapid shutdown initiation device must operate all disconnecting means necessary to control conductors in compliance with CEC 690.12.

Rapid shutdown must be provided as required by CEC 690.12 with one of the following methods (Select one):

☐ The inverter(s) is within 10 feet of the array, and the location of the inverter is such that uncontrolled PV

system conductors are no greater than 5 feet of length within the building. A remotely-controlled AC disconnecting means is immediately adjacent to or as close as practicable to the inverters, and located within 10 feet of the array.

☐ The inverter(s) is within 10 feet of the array, and the location of the inverter is such that uncontrolled PV system conductors are no greater than 5 feet of length with the building. Reduction of the voltage for the inverter output within the time required by CEC 690.12 must be verified in the field, or the inverter output is listed to UL 1741 with rapid shutdown capability.

☐ Remotely-controlled DC disconnecting means are located within 10 feet of the PV array and DC input of the inverter(s), and the locations of the disconnecting means are such that uncontrolled PV system conductors are no greater than 5 feet of length within the building. Reduction of the voltage for the inverter output within the time required by CEC 690.12 must be verified in the field, or the inverter output are listed to UL 1741 with rapid shutdown capability.

☐ Remotely-controlled DC disconnecting means is located within 10 feet of the array at the DC input of the inverter(s) connected to a module level DC-DC converter circuit where the DC-DC converter circuit meets the requirements for controlled conductors when disconnected from the inverter. Reduction of the voltage for the DC-DC converter output and the inverter output within the time required by CEC 690.12 must be verified in the field, or the DC-DC converter output and the inverter output are listed UL 1741 with rapid shutdown capability.

☐ A UL 1741-listed and identified inverter(s) with input and output rapid shutdown capability supplying module level DC-DC converter circuit where the DC-DC converter circuit meets the requirements for controlled conductors when disconnected from the inverter.

☐ A UL 174-listed rapid shutdown system:
Manufacturer: _____
Testing Agency Name: _____
System Model Number: _____
System Components: _____

17) Grounding and Bonding of Modules and Racking System (Select one):

☐ Racking system listed to UL 2703 using modules identified in the listing.

☐ Other method subject to the Division of Building and Safety approval.

Solar PV Standard Plan — Simplified
Central/String Inverter Systems for One- and Two-Family Dwellings

Markings

CEC Articles 690 and 705 and CA Residential Code Section R324 require the following labels or markings be installed at these components of the photovoltaic system:

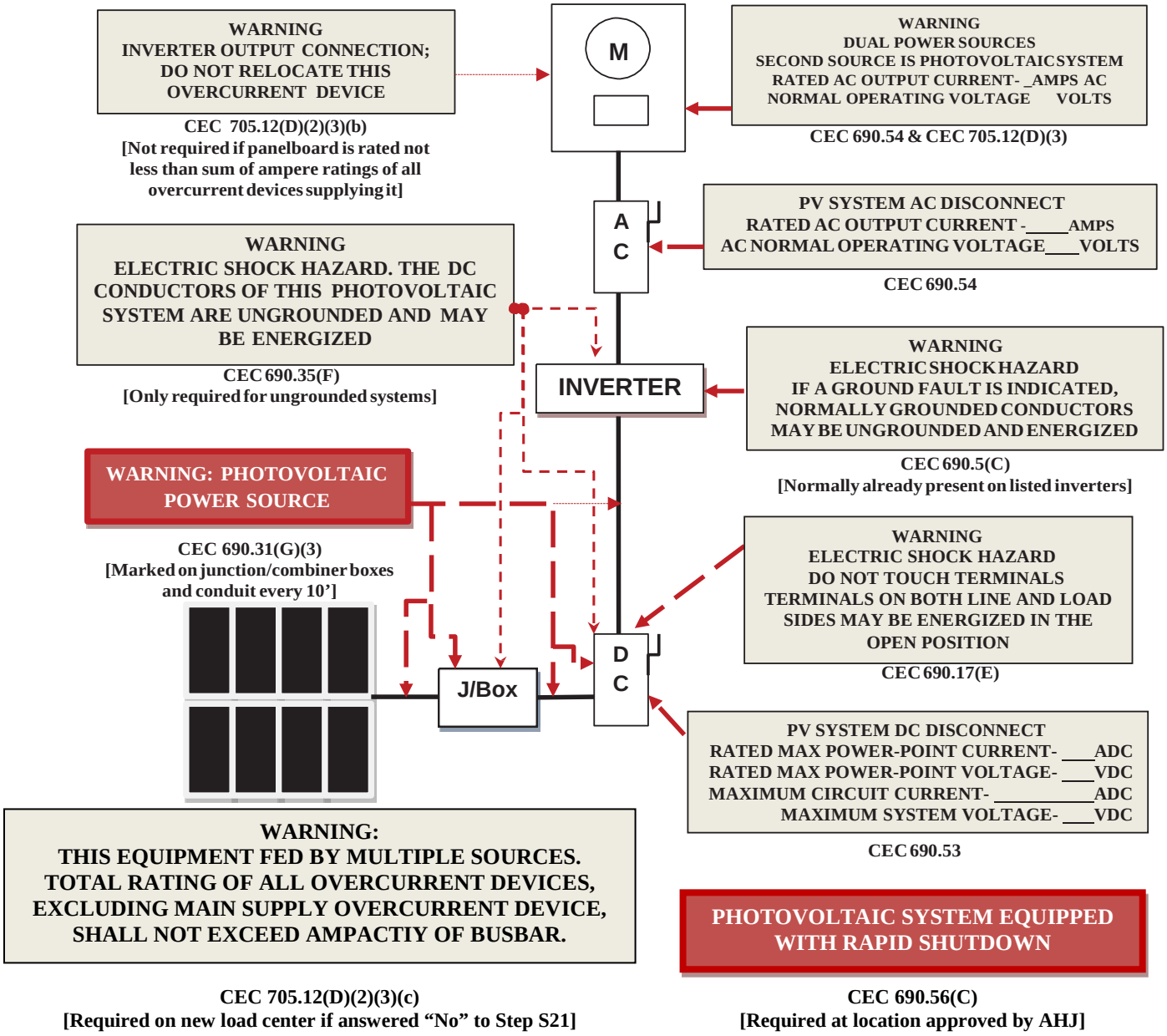

Informational note: ANSI Z535.4 provides guidelines for the design of safety signs and labels for application to products. A phenolic plaque with contrasting colors between the text and background would meet the intent of the code for permanency. No type size is specified, but 20 point (3/8") should be considered the minimum.

CEC 705.12 requires a permanent plaque or directory denoting all electric power sources on or in the premises or rapid fire shutdown equipment.

Solar PV Standard Plan — Simplified
Central/String Inverter Systems for One- and Two-Family Dwellings

TAG	DESCRIPTION
1	SOLAR PV MODULE / STRING
2	DC/DC CONVERTERS INSTALLED? YES / NO (IF YES, STEPS 6 & 8 REQUIRED)
3	SOURCE CIRCUIT JUNCTION BOX INSTALLED?: YES / NO
4	SEPARATE DC DISCONNECT INSTALLED?: YES / NO
5	INTERNAL INVERTER DC DISCONNECT: YES / NO
6	CENTRAL INVERTER
7	LOAD CENTER INSTALLED?: YES / NO
8	PV PRODUCTION METER INSTALLED?: YES / NO
9	*SEPARATE AC DISCONNECT INSTALLED?: YES / NO
10	CONNECT TO INVERTER #2 (USE LINE DIAGRAM 2)

* Consult with your local AHJ and /or Utility

SINGLE-LINE DIAGRAM #1 – NO STRINGS COMBINED PRIOR TO INVERTER

CHECK A BOX FOR WHETHER SYSTEM IS GROUNDED OR UNGROUNDED: ☐ **GROUNDED (INCLUDE GEC)**

REFER TO STEP 16 FOR RAPID SHUTDOWN DETAILS ☐ **UNGROUNDED**

FOR UNGROUNDED SYSTEMS:
- DC OCPD MUST DISCONNECT BOTH CONDUCTORS OF EACH SOURCE CIRCUIT
- UNGROUNDED CONDUCTORS MUST BE IDENTIFIED PER 210.5(C). WHITE-FINISHED CONDUCTORS ARE NOT PERMITTED.

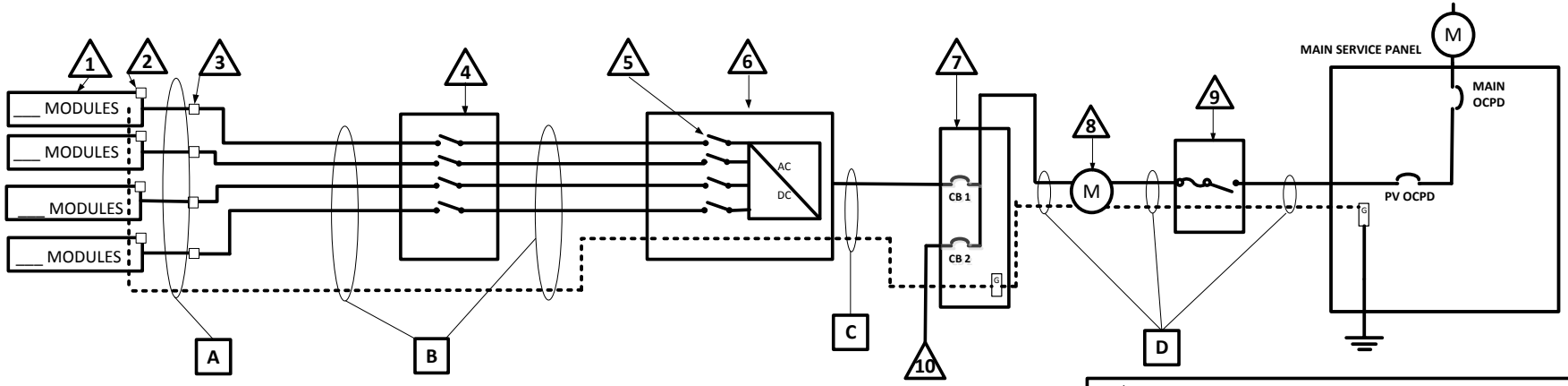

IF DC/DC CONVERTERS ARE USED, CHECK THE BOX BELOW THE CORRESPONDING CONFIGURATION

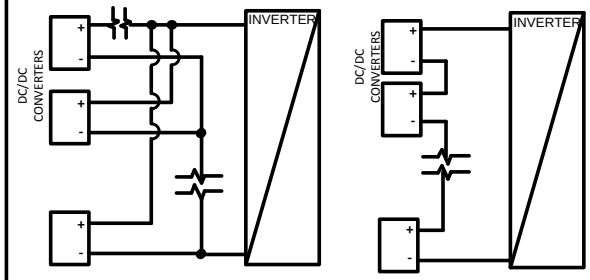

☐ PARALLEL DC/DC CONVERTERS ON ONE SOURCE CIRCUIT (FIXED UNIT VOLTAGE DC/DC CONVERTERS)

☐ DC/DC CONVERTERS ARE ALL RUN IN SERIES (FIXED SOURCE CIRCUIT VOLTAGE DC/DC CONVERTERS)

CONDUCTOR/CONDUIT SCHEDULE

☐ TAG	DESCRIPTION AND CONDUCTOR TYPE	CONDUCTOR SIZE	NUMBER OF CONDUCTORS	CONDUIT/CABLE TYPE	CONDUIT SIZE
A	USE-2 ☐ OR PV-WIRE ☐				
	EGC/GEC:				
B					
	EGC/GEC:				
C					
	EGC/GEC:				
D					
	EGC/GEC:				

ENTER "N/A" WHERE SUITABLE FOR WHEN NOT USING CONDUIT OR CABLE AS PERMITTED BY CODE

Solar PV Standard Plan — Simplified
Central/String Inverter Systems for One- and Two-Family Dwellings

TAG	DESCRIPTION
1	SOLAR PV MODULE / STRING
2	DC/DC CONVERTERS INSTALLED? YES / NO (IF YES, STEPS 6 & 8 REQUIRED)
3	SOURCE CIRCUIT JUNCTION BOX INSTALLED?: YES / NO
4	COMBINER BOX (STEPS 11 & 12 REQUIRED)
5	SEPARATE DC DISCONNECT INSTALLED?: YES / NO
6	INTERNAL INVERTER DC DISCONNECT: YES / NO
7	CENTRAL INVERTER
8	LOAD CENTER INSTALLED?: YES / NO
9	PV PRODUCTION METER INSTALLED?: YES / NO
10	*SEPARATE AC DISCONNECT INSTALLED?: YES / NO
11	CONNECT TO INVERTER #2 (USE LINE DIAGRAM 4)

* Consult with your local AHJ and /or Utility

SINGLE-LINE DIAGRAM #2 – COMBINING STRINGS PRIOR TO INVERTER

CHECK A BOX FOR WHETHER SYSTEM IS GROUNDED OR UNGROUNDED: ☐ **GROUNDED (INCLUDE GEC)**

REFER TO STEP 16 FOR RAPID SHUTDOWN DETAILS ☐ **UNGROUNDED**

FOR UNGROUNDED SYSTEMS:
- **DC OCPD MUST DISCONNECT BOTH CONDUCTORS OF EACH SOURCE CIRCUIT**
- **UNGROUNDED CONDUCTORS MUST BE IDENTIFIED PER 210.5(C). WHITE-FINISHED CONDUCTORS ARE NOT PERMITTED.**

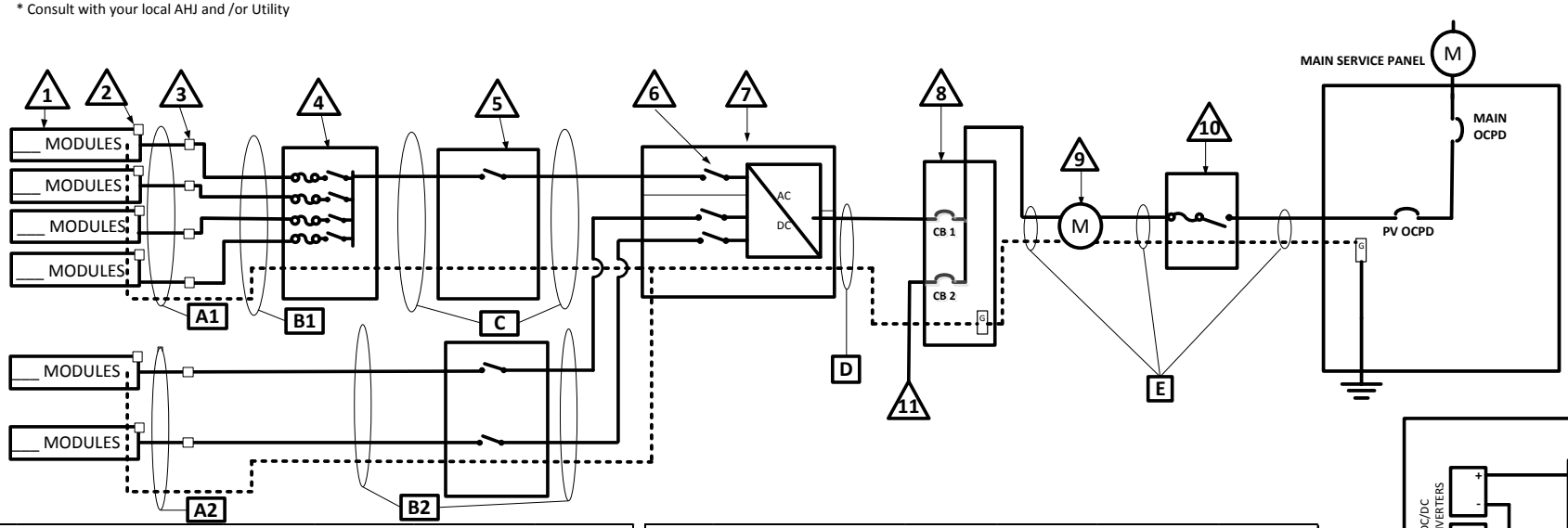

COMBINER CONDUCTOR/CONDUIT SCHEDULE					
☐ TAG	DESCRIPTION AND CONDUCTOR TYPE	CONDUCTOR SIZE	NUMBER OF CONDUCTORS	CONDUIT/CABLE TYPE	CONDUIT SIZE
A1	USE-2 ☐ OR PV-WIRE ☐				
	EGC/GEC:				
B1					
	EGC/GEC:				
C					
	EGC/GEC:				
D					
	EGC/GEC:				
E					
	EGC/GEC:				

NON-COMBINED STRINGS CONDUCTOR/CONDUIT SCHEDULE (IF APPLICABLE)					
☐ TAG	DESCRIPTION AND CONDUCTOR TYPE	CONDUCTOR SIZE	NUMBER OF CONDUCTORS	CONDUIT/CABLE TYPE	CONDUIT SIZE
A2	USE-2 ☐ OR PV-WIRE ☐				
	EGC/GEC:				
B2					
	EGC/GEC:				

ENTER "N/A" WHERE SUITABLE FOR WHEN NOT USING CONDUIT OR CABLE AS PERMITTED BY CODE

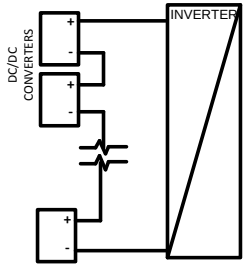

IF DC/DC CONVERTERS ARE USED, THEY ARE RUN IN SERIES (FIXED SOURCE CIRCUIT VOLTAGE DC/DC CONVERTERS)

Solar PV Standard Plan — Simplified
Central/String Inverter Systems for One- and Two-Family Dwellings

Supplemental Calculation Sheets for Inverter #2
(Only include if second inverter is used)

DC Information:

Module Manufacturer: _____ Model: _____

S2) Module V_{oc} (from module nameplate): _____Volts

S3) Module I_{sc} (from module nameplate): _____Amps
Is Module I_{SC} below 9.6 Amps? ☐ Yes ☐ No (If No, this plan is not applicable.)

S4) Module DC output power under standard test conditions (STC) = _____ Watts (STC)

S5) DC Module Layout

Identify each source circuit (string) for inverter 1 shown on the roof plan with a Tag (e.g., A, B, C …)	Number of modules per source circuit for inverter 1	Identify, by tag, which source circuits on the roof are to be paralleled (if none, put N/A)
		Combiner 1:
		Combiner 2:
Total number of source circuits for inverter 1:		

S6) Are DC/DC Converters used? ☐ Yes ☐ No If No, skip to STEP S7. If Yes, enter info below.

DC/DC Converter Model #: _____Max DC
Max DC Output Current: _____Amps Max
# of DC/DC Converters in an input circuit: _____

DC/DC Converter Max DC Input Voltage: _____Volts
Max DC Output Voltage: _____Volts
DC/DC Converter Max DC Input Power: _____Watts

S7) Maximum System DC Voltage

Use A1 or A2 for systems without DC/DC converters, and B1 or B2 with DC/DC converters.

Module V_{OC} (STEP S2) = _____ x # in series (STEP S5)_____x C_F (STEP S1) _____ = _____V

Table 1. Maximum Number of PV Modules in Series Based on Module Rated V_{OC} for 600 Vdc Rated Equipment (CEC 690.7)													
Max. Rated Module V_{OC} (*1.12) (Volts)	29.76	31.51	33.48	35.71	38.27	41.21	44.64	48.70	53.57	59.52	66.96	76.53	89.29
Max. Rated Module V_{OC} (*1.14) (Volts)	29.24	30.96	32.89	35.09	37.59	40.49	43.86	47.85	52.63	58.48	65.79	75.19	87.72
Max # of Modules for 600 Vdc	18	17	16	15	14	13	12	11	10	9	8	7	6

Use for DC/DC converters. The value calculated below must be less than DC/DC converter max DC input voltage (STEP S6).

Module V_{OC} (STEP S2) _____ x # of modules per converter (STEP S6) ____x C_F (STEP S1) _____=_____ V

Largest Module VOC for Single-Module DC/DC Converter Configurations (With 80V AFCI Cap) (CEC 690.7 and 690.11)

S8) Maximum System DC Voltage from DC/DC Converters to Inverter – Only required if Yes in STEP S6

Maximum System DC Voltage = _____ Volts

S9) Sizing Source Circuit Conductors:

Source Circuit Conductor Size = Min. #10 AWG copper conductor, 90°C wet (USE-2, PV Wire, XHHW-2, THWN-2, RHW-2)

For up to 8 conductors in roof-mounted conduit exposed to sunlight at least ½" from the roof covering (CEC 310)

Note: For over 8 conductors in the conduit or mounting height of lower than ½"from the roof, this plan is not applicable.

S10) Are PV source circuits combined prior to the inverter? ☐Yes ☐No

If No, use Single Line Diagram 1 with Single Line Diagram 3 and proceed to STEP S12.

If Yes, use Single Line Diagram 2 with Single Line Diagram 4 and proceed to STEP S11 after this step.

Is source circuit OCPD required? ☐ Yes ☐ No

Source circuit OCPD size (if needed): 15 Amps

Are the source circuits combined on the roof? ☐ Yes ☐ N

If "Yes", the DC output of the combiner must have a load breaker disconnecting means located in the combiner or within (6ft) of the combiner.

S11) Sizing PV Output Circuit Conductors – If strings are combined (answered "Yes" in Step S10), Output Circuit Conductor Size = Min. #6 AWG copper conductor.

S12) Inverter Disconnect

Does the inverter have an integrated DC disconnect? ☐ Yes ☐ No If yes, proceed to STEP S13.

If No, the external DC disconnect to be installed is rated for _____ Amps (DC) and _____Volts (DC)

S13) Inverter information:
Manufacturer: _____ Model: _____
Max. Continuous AC Output Current Rating: _____ Amps
Integrated DC Arc-Fault Circuit Protection? ☐ Yes ☐ No (If No is selected, this plan is not applicable.)
Grounded or Ungrounded System: ☐Grounded ☐Ungrounded

AC Information:

S14) Sizing Inverter Output Circuit Conductors and OCPD:
Inverter Output OCPD rating = _____ Amps (Table 3)
Inverter Output Circuit Conductor Size = _____ AWG (Table 3)

Table 3. Minimum Inverter Output OCPD and Circuit Conductor Size									
Inverter Continuous Output Current Rating (Amps) (STEP 14)	12	16	20	24	28	32	36	40	48
Minimum OCPD Size (Amps)	15	20	25	30	35	40	45	50	60
Minimum Conductor Size (AWG, 75°C, Copper)	14	12	10	10	8	8	6	6	6

Load Center Calculations
(Omit if a load center will not be installed for PV OCPDs)

S15) Load Center Output:
Calculate the sum of the maximum AC outputs from each inverter.
Inverter #1 Max Continuous AC Output Current Rating[STEP S13] _____ × 1.25 = _____ Amps
Inverter #2 Max Continuous AC Output Current Rating[STEP S13] _____ × 1.25 = _____ Amps
Total inverter currents connected to load center (sum of above) = _____ Amps

Conductor Size: _____ AWG
Overcurrent Protection Device: _____ Amps
Load center bus bar rating: _____ Amps
Can the load center accept more than two breakers? ☐Yes ☐No

If Yes, the sum of 125% of the inverter output circuit currents and the rating of the overcurrent device protecting the busbar must not exceed 120% of the ampacity of the busbar.

If No, the sum of ampere rating of the two PV overcurrent devices must not exceed the rating of the busbar.

Solar PV Standard Plan — Simplified
Central/String Inverter Systems for One- and Two-Family Dwellings

TAG	DESCRIPTION
1	SOLAR PV MODULE / STRING
2	DC/DC CONVERTERS INSTALLED? YES / NO (IF YES, STEPS 6 & 8 REQUIRED)
3	SOURCE CIRCUIT JUNCTION BOX INSTALLED?: YES / NO
4	SEPARATE DC DISCONNECT INSTALLED?: YES / NO
5	INTERNAL INVERTER DC DISCONNECT: YES / NO
6	CENTRAL INVERTER
7	*SEPARATE AC DISCONNECT INSTALLED?: YES / NO
8	TO LOAD CENTER ON LINE DIAGRAM 1

* Consult with your local AHJ and /or Utility

SINGLE-LINE DIAGRAM #3 – ADDITIONAL INVERTER FOR DIAGRAM #1

INVERTER # 2

CHECK A BOX FOR WHETHER SYSTEM IS GROUNDED OR UNGROUNDED: ☐ **GROUNDED (INCLUDE GEC)**

REFER TO STEP 16 FOR RAPID SHUTDOWN DETAILS ☐ **UNGROUNDED**

FOR UNGROUNDED SYSTEMS:
- DC OCPD MUST DISCONNECT BOTH CONDUCTORS OF EACH SOURCE CIRCUIT
- UNGROUNDED CONDUCTORS MUST BE IDENTIFIED PER 210.5(C). WHITE-FINISHED CONDUCTORS ARE NOT PERMITTED.

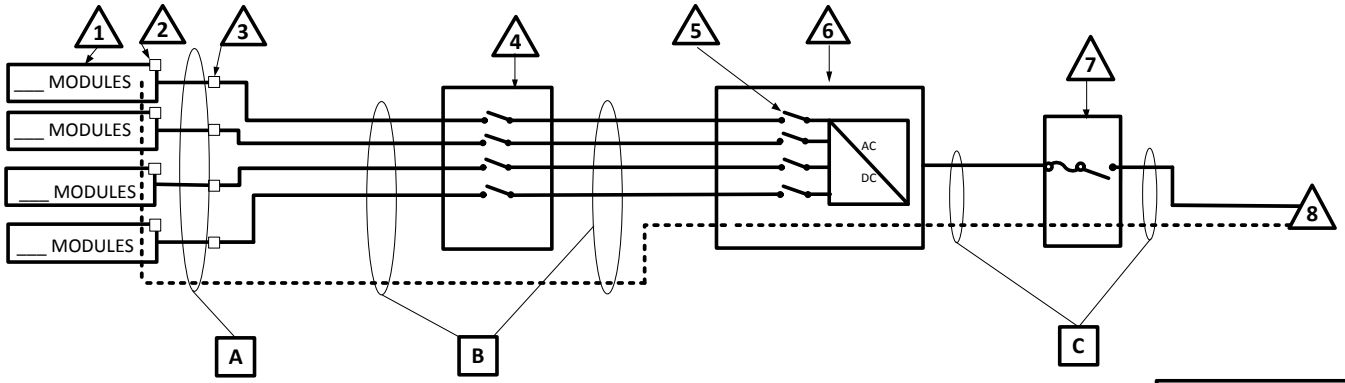

IF DC/DC CONVERTERS ARE USED, CHECK THE BOX BELOW THE CORRESPONDING CONFIGURATION

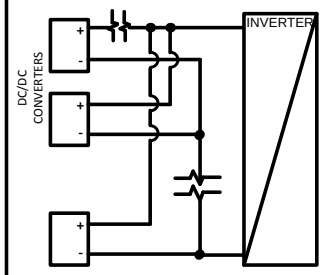

☐ PARALLEL DC/DC CONVERTERS ON ONE SOURCE CIRCUIT (FIXED UNIT VOLTAGE DC/DC CONVERTERS)

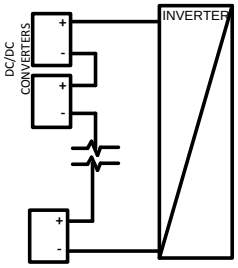

☐ DC/DC CONVERTERS ARE ALL RUN IN SERIES (FIXED SOURCE CIRCUIT VOLTAGE DC/DC CONVERTERS)

CONDUCTOR/CONDUIT SCHEDULE

☐ TAG	DESCRIPTION AND CONDUCTOR TYPE	CONDUCTOR SIZE	NUMBER OF CONDUCTORS	CONDUIT/CABLE TYPE	CONDUIT SIZE
A	USE-2 ☐ OR PV-WIRE ☐				
	EGC/GEC:				
B					
	EGC/GEC:				
C					
	EGC/GEC:				

ENTER "N/A" WHERE SUITABLE FOR WHEN NOT USING CONDUIT OR CABLE AS PERMITTED BY CODE

Solar PV Standard Plan — Simplified
Central/String Inverter Systems for One- and Two-Family Dwellings

△ TAG	DESCRIPTION
1	SOLAR PV MODULE / STRING
2	DC/DC CONVERTERS INSTALLED? YES / NO (IF YES, STEPS 6 & 8 REQUIRED)
3	SOURCE CIRCUIT JUNCTION BOX INSTALLED?: YES / NO
4	COMBINER BOX (STEPS 11 & 12 REQUIRED)
5	SEPARATE DC DISCONNECT INSTALLED?: YES / NO
6	INTERNAL INVERTER DC DISCONNECT: YES / NO
7	CENTRAL INVERTER
8	*SEPARATE AC DISCONNECT INSTALLED?: YES / NO
9	TO LOAD CENTER ON LINE DIAGRAM 3

* Consult with your local AHJ and /or Utility

SINGLE-LINE DIAGRAM #4 – ADDITIONAL INVERTER FOR DIAGRAM #2

INVERTER # 2

CHECK A BOX FOR WHETHER SYSTEM IS GROUNDED OR UNGROUNDED: ☐ **GROUNDED (INCLUDE GEC)**

REFER TO STEP 16 FOR RAPID SHUTDOWN DETAILS ☐ **UNGROUNDED**

FOR UNGROUNDED SYSTEMS:
- DC OCPD MUST DISCONNECT BOTH CONDUCTORS OF EACH SOURCE CIRCUIT
- UNGROUNDED CONDUCTORS MUST BE IDENTIFIED PER 210.5(C). WHITE-FINISHED CONDUCTORS ARE NOT PERMITTED.

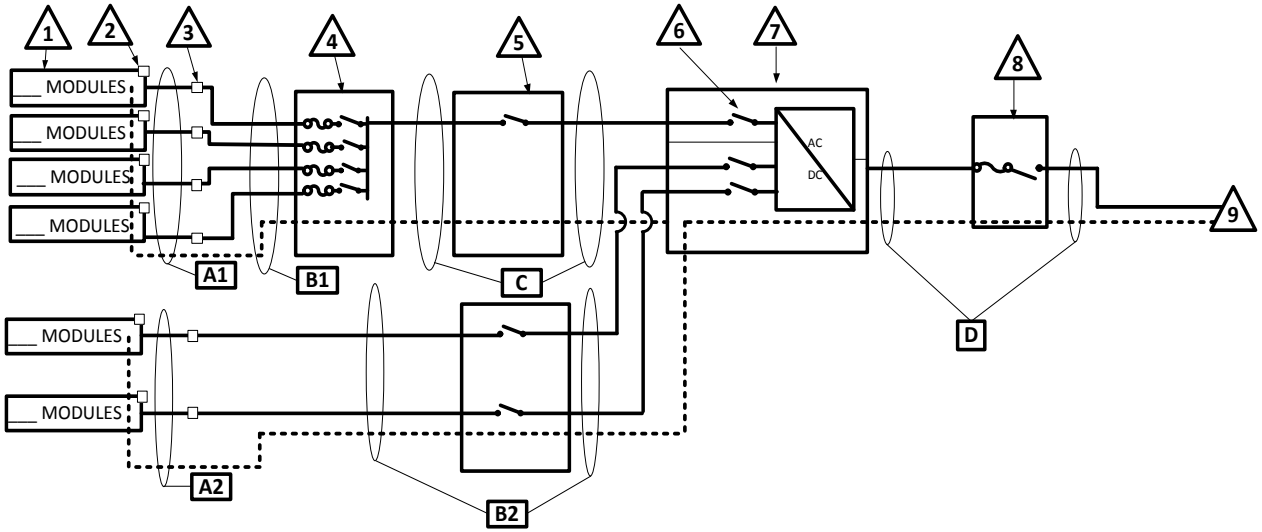

COMBINER CONDUCTOR/CONDUIT SCHEDULE					
☐ TAG	DESCRIPTION AND CONDUCTOR TYPE	CONDUCTOR SIZE	NUMBER OF CONDUCTORS	CONDUIT/CABLE TYPE	CONDUIT SIZE
A1	USE-2 ☐ OR PV-WIRE ☐				
	EGC/GEC:				
B1					
	EGC/GEC:				
C					
	EGC/GEC:				
D					
	EGC/GEC:				

NON-COMBINED STRINGS CONDUCTOR/CONDUIT SCHEDULE (IF APPLICABLE)					
☐ TAG	DESCRIPTION AND CONDUCTOR TYPE	CONDUCTOR SIZE	NUMBER OF CONDUCTORS	CONDUIT/CABLE TYPE	CONDUIT SIZE
A2	USE-2 ☐ OR PV-WIRE ☐				
	EGC/GEC:				
B2					
	EGC/GEC:				

ENTER "N/A" WHERE SUITABLE FOR WHEN NOT USING CONDUIT OR CABLE AS PERMITTED BY CODE

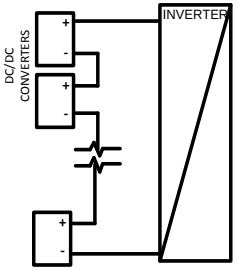

IF DC/DC CONVERTERS ARE USED, THEY ARE RUN IN SERIES (FIXED SOURCE CIRCUIT VOLTAGE DC/DC CONVERTERS)

SOLAR PV STANDARD PLAN

Roof Layout Diagram for One- and Two-Family Dwellings

Items required: roof layout of all panels, modules, clear access pathways and approximate locations of electrical disconnecting means, roof access points, and rapid shutdown initiation device.

Solar PV Standard Plan – Simplified Microinverter and ACM Systems for One- and Two-Family Dwellings

SCOPE: Use this plan ONLY for systems using utility-interactive Microinverters or AC Modules (ACM) not exceeding a combined system AC inverter output rating of 10 kW, with a maximum of 3 branch circuits, one PV module per inverter and with PV module ISC maximum of 10-A DC, installed on a roof of a one- or two-family dwelling or accessory structure. The photovoltaic system must interconnect to a single-phase AC service panel of 120/240 Vac with service panel bus bar rating of 225 A or less. This plan is not intended for bipolar systems, hybrid systems or systems that utilize storage batteries, charge controllers or trackers. Systems must be in compliance with current California Building Standards Codes and local amendments of the City of Monterey Park. Other articles of the California Electrical Code (CEC) shall apply as specified in section 690.3.

MANUFACTURER'S SPECIFICATION SHEETS MUST BE PROVIDED for proposed inverters, modules, combiner/junction boxes and racking systems. Installation instructions and details for bonding and grounding equipment shall be provided. Listed and labeled equipment shall be installed and used in accordance with any instructions included in the listing or labeling (CEC 110.3). Equipment intended for use with PV system shall be identified and listed for the application CEC 690.4(D).

Applicant and Site Information

Job Address: _____ Permit #: _____

Contractor /Engineer Name: _____ License # and Class: _____

Signature: _____ Date: _____ Phone Number: _____

1. General Requirements and System Information

☐ Microinverter

Number of PV modules installed: _____

Number of Microinverters installed: _____

☐ AC Module (ACM)

Number of ACMs installed: _____

*Note: Listed Alternating-Current Module (ACM) is defined in **CEC 690.2** and installed per **CEC 690.6***

1.1 Number of Branch Circuits, 1, 2 or 3: _____

1.2 Actual number of Microinverters or ACMs per branch circuit: 1 _____ 2._____ 3._____

1.3 Total AC system power rating = (Total Number of Microinverters or ACMs) * (AC inverter power output)

= _____ Watts

1.4 Lowest expected ambient temperature for this plan in Table 1: For -1 to -5°C use 1.12 or for -6 to -10°C use 1.14 correction factors.

1.5 Average ambient high temperature for this plan: = +47°C

Note: For lower expected ambient or higher average ambient high temperatures, use Comprehensive Standard Plan.

2. Microinverter or ACM Information and Ratings

Microinverters with ungrounded DC inputs shall be installed in accordance with CEC 690.35.

Microinverter or ACM Manufacturer: _____

Model: _____

2.1 Rated (continuous) AC output power: _____ Watts

2.2 Nominal AC voltage rating: _____ Volts

2.3 Rated (continuous) AC output current: _____ Amps

If installing ACMs, skip [STEPS 2.4]

2.4 Maximum DC input voltage rating: _____ Volts (limited to 79 V, otherwise use the Comprehensive Standard Plan)

2.5 Maximum AC output overcurrent protection device (OCPD) _____ Amps

2.6 Maximum number of Microinverters or ACMs per branch circuit: _____

3. PV Module Information

(If installing ACMs, skip to [STEP 4])

PV Module Manufacturer: _____

Model: _____

Module DC output power under standard test conditions (STC) = _____ Watts

3.1 Module V_{oc} at STC (from module nameplate): _____ Volts
3.2 Module I_{sc} at STC (from module nameplate): _____ Amps
3.3 Adjusted PV Module DC voltage at minimum temperature = [Table 1] _____ [cannot exceed Step 2.4]

Table 1. Module V_{oc} at STC Based on Inverter Maximum DC Input Voltage Derived from CEC 690.7																
Microinverter Max. DC Input [STEP 2.4] (Volts)	34	37	40	43	46	49	52	55	58	61	64	67	70	73	76	79
Max. Module VOC @ STC, 1.12 (-1 to -5°C) Correction Factor (Volts)	30.4	33.0	35.7	38.4	41.1	43.8	46.4	49.1	51.8	54.5	57.1	59.8	62.5	65.2	67.9	70.5
Max. Module VOC @ STC, 1.14 (-6 to -10°C) Correction Factor (Volts)	29.8	32.5	35.1	37.7	40.4	43.0	45.6	48.2	50.9	53.5	56.1	58.8	61.4	64.0	66.7	69.3

4. Branch Circuit Output Information

Fill in [Table 3] to describe the branch circuit inverter output conductor and OCPD size. Use [Table 2] for determining the OCPD and Minimum Conductor size.

Table 2. Branch Circuit OCPD and Minimum Conductor Size*				
Circuit Current (Amps)	Circuit Power (Watts)	OCPD (Amps)	Minimum Conductor Size (AWG)	Minimum Metal Conduit Size for 6 Current Carrying Conductors
12	2880	15	12	¾”
16	3840	20	10	¾”
20	4800	25	8	1”
24	5760	30	8	1”

*CEC 690.8 and 210.19 (A)(1) Factored in Table 2, Conductors are copper, insulation must be 90°C wet-rated. Table 2 values are based on maximum ambient temperature of 69°C, which includes 22°C adder, exposed to direct sunlight, mounted > 0.5 inches above rooftop, ≤ 6 current carrying conductors (3 circuits) in a circular raceway. Otherwise use Comprehensive Standard Plan.

Table 3. PV Array Configuration Summary			
	Branch 1	Branch 2	Branch 3
Number of Microinverters or ACMs [STEP 1]			
Selected Conductor Size [Table 2] (AWG)			
Selected Branch and Inverter Output OCPD [Table 2]			

5. Solar Load Center (if used)

5.1 Solar Load Center is to have a bus bar rating not less than 100 Amps. Otherwise use Comprehensive Standard Plan.

5.2 Circuit Power see [STEP 1] =_____ Watts

5.3 Circuit Current = (Circuit Power) / (AC voltage) = _____ Amps

Table 4. Solar Load Center and Total Inverter Output OCPD and Conductor Size**				
Circuit Current (Amps)	Circuit Power (Watts)	OCPD (Amps)	Minimum Conductor Size (AWG)	Minimum Metal Conduit Size
24	5760	30	10	½"
28	6720	35	8	¾"
32	7680	40	8	¾"
36	8640	45	8	¾"
40	9600	50	8	¾"
41.6	≤ 10000	60	6	¾"

**CEC 690.8 and 210.19 (A)(1) factored in Table 4, Conductors are copper, insulation must be 90°C wet-rated. Table 4 values are based on maximum ambient temperature of 47°C (no rooftop temperature adder in this calculation), ≤ 3 current carrying conductors in a circular raceway. Otherwise use Comprehensive Standard Plan.

6. Point of Connection to Utility:

6.1 Load Side Connection only! Otherwise use the Comprehensive Standard Plan.

6.2 Is the PV OCPD positioned at the opposite end from input feeder location or main OCPD location?

☐ Yes ☐ No (If No, then use 100% row in Table 5)

6.3 Per 705.12(D)(2): (Combined inverter output OCPD size + Main OCPD size) ≤ [bus bar size × (100% or 120%)]

Table 5. Maximum Combined Inverter Output Circuit OCPD									
Bus bar Size (Amps)	100	125	125	200	200	200	225	225	225
Main OCPD (Amps)	100	100	125	150	175	200	175	200	225
Maximum Combined Inverter OCPD with 120% of bus bar rating (Amps)	20	50	25	60†	60†	40	60†	60†	45
Maximum Combined Inverter OCPD with 100% of bus bar rating (Amps)	0	25	0	50	25	0	50	25	0

†This plan limits the maximum system size to less than 10 kW, therefore the OCPD size is limited to 60 A. Reduction of Main Breaker is not permitted with this plan.

7. Grounding and Bonding

Check one of the boxes for whether system is grounded or ungrounded: ☐ Grounded ☐ Ungrounded

For Microinverters with a grounded DC input, systems must follow the requirements of GEC (CEC 690.47) and EGC (CEC 690.43).

For ACM systems and Microinverters with ungrounded a DC input follow the EGC requirements of (CEC 690.43).

8. Markings

Informational note: ANSI Z535.4 provides guidelines for the design of safety signs and labels for application to products. A phenolic plaque with contrasting colors between the text and background would meet the intent of the code for permanency. No type size is specified, but 20 point (3/8”) should be considered the minimum.

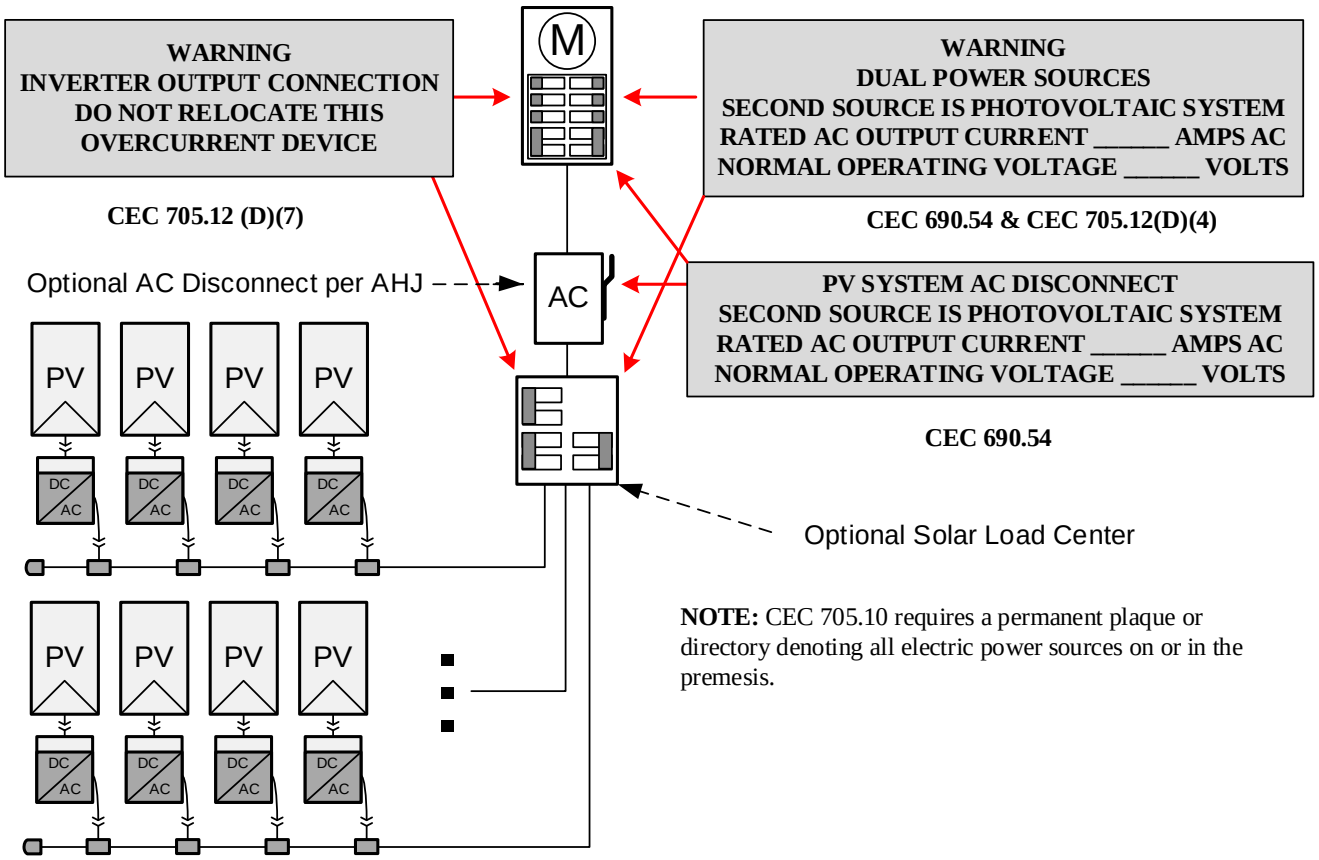

Solar PV Standard Plan — Simplified
Central/String Inverter Systems for One- and Two-Family Dwellings

9. Single-Inverter Line Diagram

Equipment Schedule

△ TAG	DESCRIPTION: (Provide model # if provided)
1	Solar PV Module or ACM:
2	Microinverter (if not ACM):
3	Junction Box (es):
4	Solar Load Center, Yes / No:
5	Performance Meter Yes / No:
6	*Utility External Disconnect Switch Yes / No:
7	Main Electrical Service Panel

Single-Line Diagram for Microinverters or ACMs

Check a box for dc system grounding: ☐ Grounded, ☐ Ungrounded
For ungrounded dc power systems, EGC is required
For grounded dc power systems, GEC & EGC are required
Refer to CEC 250.120 for EGC installation & Table 250.122 for sizing

* Consult with your local AHJ and /or Utility

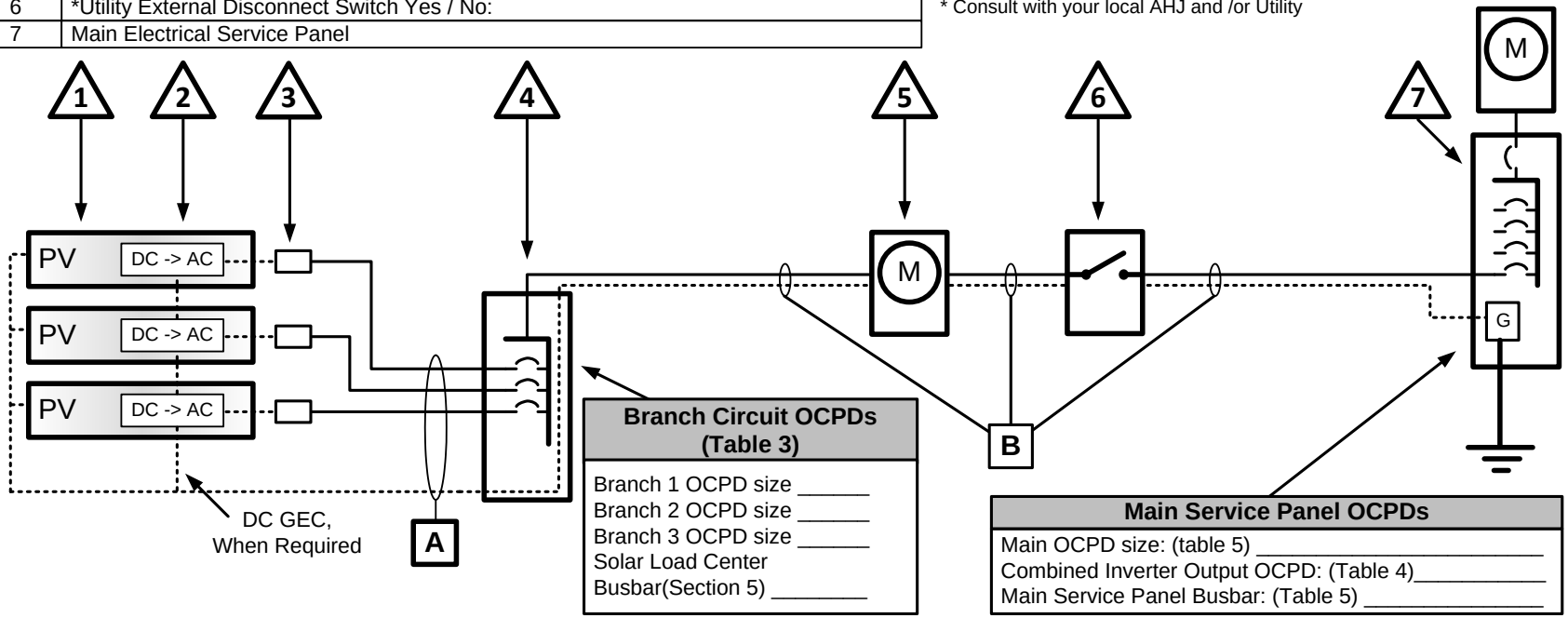

Conductor, Cable and Conduit Schedule

☐ TAG	Description and Conductor Type: (Table 3)	Conductor Size	Number of Conductors	Conduit/ Conductor/ Cable Type	Conduit Size
A	Current-Carrying Conductors: (for each branch circuit)				
	EGC:				
	GEC (when required):				
B	Current-Carrying Conductors:				
	EGC:				
	GEC (when required):				

SOLAR PV STANDARD PLAN - SIMPLIFIED

Microinverter and ACM Systems for One- and Two-Family Dwellings
ROOF LAYOUT PLAN

Items required: roof layout of all panels, modules, clear access pathways and approximate locations of electrical disconnecting means and roof access points.

Structural Criteria for Residential Rooftop Solar Energy Installations

Use of this document

This document includes a one-page list of structural criteria for over-the-counter or online approval, as well as attached tables and figures that supplement the criteria and explain their use.

This document applies to flush-mounted solar arrays installed on the roofs of wood-framed one- and two family dwellings. “Flush-mounted” means the modules are installed parallel to, and relatively close to, the roof surface (see the “Solar Array Check” section of the Structural Criteria for specific qualifying requirements).
This list is intended to be a simple pre-installation check to gain reasonable assurance that the design of the solar array complies with the structural provisions of the 2016 California Building Code (CBC) and 2016 California Residential Code (CRC). It is not intended to provide post-installation inspection criteria.

Regional and Site Assumptions

This document is based on the following regional and site assumptions:

- If in Wind Exposure B (urban, suburban or wooded areas), the dwelling may be located:
  - in a Special Wind Region (see Map 1) with design wind speeds between 110 and 130 mph, or
  - on a tall hill, provided average slope is no steeper than 15%.
- If in Wind Exposure C (within 500 yards of large open fields or grasslands), the dwelling is:
  - in a standard 110 mph design wind speed region, and
  - not on a hill with a grade steeper than 5%.

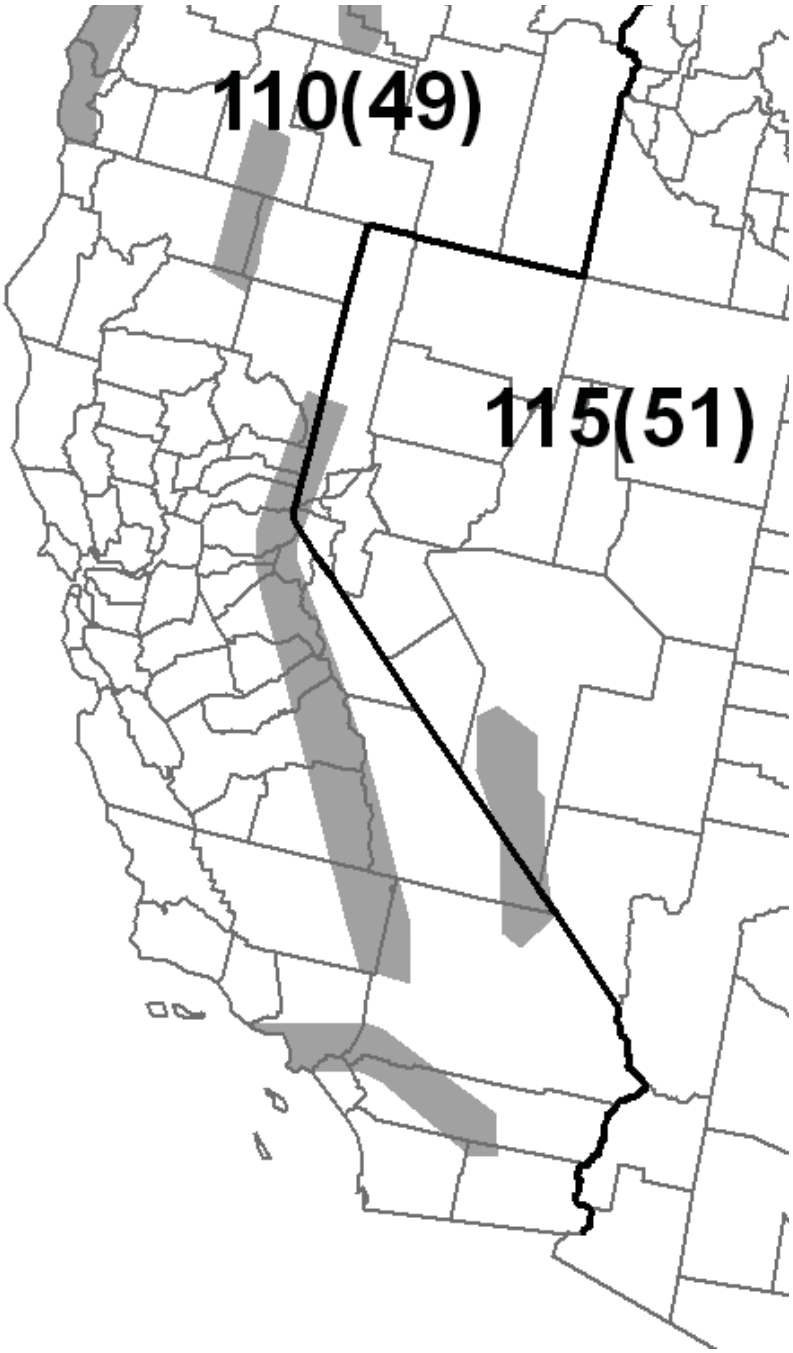

Map 1. California Design Wind Speed Map (Ref: ASCE 7-10).

The number outside the parentheses represents the design wind speed in mph. Typical design wind speed is 110 mph. The gray shaded areas on the map indicate “Special Wind Regions” where higher wind speeds may apply. When the project is in a gray shaded area, contact the local building department for the design wind speed.

STRUCTURAL CRITERIA FOR RESIDENTIAL FLUSH-MOUNTED SOLAR ARRAYS

1. ROOF CHECKS

A. Visual Review/Contractor's Site Audit of Existing Conditions:

1) Is the roof a shingle roof without a reroof overlay? ☐ Y ☐ N

2) Does the roof structure appear structurally sound, without signs of alterations or significant structural deterioration or sagging, as illustrated in Figure 1? ☐ Y ☐ N

B. Roof Structure Data:

1) Measured roof slope (e.g. 6:12): _____:12

2) Measured rafter spacing (center-to-center): _____ inch

3) Type of roof framing (rafter or manufactured truss): ☐ Rafter ☐ Truss

4) Measured rafter size (e.g. 13/4 x 33/4, not 2x4): ____ x _____ inch

5) Measured rafter horizontal span (see Figure 4): ____' - ____"ft-in

6) Horizontal rafter span per Table 2: ____' - ____"ft-in

7) Is measured horizontal rafter span less than Table 2 span? ☐ Y ☐ N ☐ Truss

2. SOLAR ARRAY CHECKS

A. Flush-mounted Solar Array:

1) Is the plane of the modules (panels) parallel to the plane of the roof? ☐ Y ☐ N

2) Is there a 2" to 10" gap between underside of module and the roof surface? ☐ Y ☐ N

3) Modules do not overhang any roof edges (ridges, hops, gable ends, eaves)? ☐ Y ☐ N

B. Do the modules plus support components weigh no more than: 4 psf for photovoltaic arrays or 5 psf for solar thermal arrays? ☐ Y ☐ N

C. Does the array cover no more than half of the total roof area (all roof planes)? ☐ Y ☐ N

D. Are solar support component manufacturer's project-specific completed worksheets, tables with relevant cells circled, or web-based calculator results attached? ☐ Y ☐ N

E. Is a roof plan of the module and anchor layout attached? (see Figure 2) ☐ Y ☐ N

F. Downward Load Check (Anchor Layout Check):

1) Proposed anchor horizontal spacing (see Figure 2): ____' - ____"ft-in

2) Horizontal anchor spacing per Table 1: ____' - ____"ft-in

3) Is proposed anchor horizontal spacing less than Table 1 spacing? ☐ Y ☐ N

G. Wind Uplift Check (Anchor Fastener Check):

1) Anchor fastener data (see Figure 3):

a. Diameter of lag screw, hanger bolt or self-drilling screw: _____ inch

b. Embedment depth of rafter: _____ inch

c. Number of screws per anchor (typically one): _____

d. Are 5/16" diameter lag screws with 2.5" embedment into the rafter used, OR does the anchor fastener meet the manufacturer's guidelines? ☐ Y ☐ N

3. SUMMARY

A. All items above are checked YES. No additional calculations are required.

B. One or more items are checked NO. Attach project-specific drawings and calculations stamped and signed by a California-licensed Civil or Structural Engineer.

Job Address: _____ Permit #: _____

Contractor/Installer: _____ License # & Class: _____

Signature: _____ Date: _____ Phone #: _____

Table 1. Maximum Horizontal Anchor Spacing				
Roof Slope		Rafter Spacing		
		16” o.c.	24” o.c.	32” o.c.
Photovoltaic Arrays (4 psf max)				
Flat to 6:12	0° to 26°	5'-4"	6'-0"	5'-4"
7:12 to 12:12	27° to 45°	1'-4"	2'-0"	2'-8"
13:12 to 24:12	46° to 63°	1'-4"	2'-0"	2'-8"
Solar Thermal Arrays (5 psf max)				
Flat to 6:12	0° to 26°	4'-0"	4'-0"	5'-4"
7:12 to 12:12	27° to 45°	1'-4"	2'-0"	2'-8"
13:12 to 24:12	46° to 63°	Calc. Req'd	Calc. Req'd	Calc. Req'd

Table 1 Notes:

1. Anchors are also known as “stand-offs”, “feet”, “mounts” or “points of attachment”. Horizontal anchor spacing is also known as “cross-slope” or “east-west” anchor spacing (see Figure 2).
2. If anchors are staggered from row-to-row going up the roof, the anchor spacing may be twice that shown above, but no greater than 6’-0”.
3. For manufactured plated wood trusses at slopes of flat to 6:12, the horizontal anchor spacing shall not exceed 4’-0” and anchors in adjacent rows shall be staggered.
4. This table is based on the following assumptions:
   - The roof structure conformed to building code requirements at the time it was built.
   - The attached list of criteria are met.
   - Mean roof height is not greater than 40 feet.
   - Roof sheathing is at least 7/16” thick oriented strand board or plywood. 1x skip sheathing is acceptable.
   - If the dwelling is in Wind Exposure B (typical urban, suburban or wooded areas farther than 500 yards from large open fields), no more than one of the following conditions apply:
     - The dwelling is located in a special wind region with design wind speed between 115 and 130 mph per ASCE 7-10.
     - The dwelling is located on the top half of a tall hill, provided average slope steeper is less than 15%.
   - If the dwelling is In Wind Exposure C (within 500 yards of large open fields or grasslands), all of the following conditions apply:
     - Design wind speed is 110 mph or less (not in a Special Wind Region), and
     - The dwelling is not located on the top half of a tall hill.
   - The solar array displaces roof live loads (temporary construction loads) that the roof was originally designed to carry.
   - The Structural Technical Appendix provides additional information about analysis assumptions.

Table 2. Roof Rafter Maximum Horizontal Span (feet - inches) [1]								
Assumed Vintage	Nominal Size	Actual Size	Non-Tile Roof [2]			Tile Roof [3]		
			Rafter Spacing					
			16" o.c.	24" o.c.	32" o.c.	16" o.c.	24" o.c.	32" o.c.
Post-1960	2x4	1½"x3½"	9'-10"	8'-0"	6'-6"	8'-6"	6'-11"	5'-6"
	2x6	1½"x5½"	14'-4"	11'-9"	9'-6"	12'-5"	10'-2"	8'-0"
	2x8	1½"x7¼"	18'-2"	14'-10"	12'-0"	15'-9"	12'-10"	10'-3"
Pre-1960	2x4	1¾"x3¾"	11'-3"	9'-9"	7'-9"	10'-3"	8'-6"	6'-9"
	2x6	1¾"x5¾"	17'-0"	14'-0"	11'-3"	14'-9"	12'-0"	9'-9"
	2x8	1¾"x7¾"	22'-3"	18'-0"	14'-6"	19'-0"	15'-6"	12'-6"

Table 2 Notes:

1. See Figure 4 for definition of roof rafter maximum horizontal span.
2. “Non-tile Roof ” = asphalt shingle, wood shingle & wood shake, with an assumed roof assembly weight of 10 psf.
3. “Tile Roof ” = clay tile or cement tile, with an assumed roof assembly weight of 20psf
4. Unaltered manufactured plated-wood trusses may be assumed to be code compliant and meet intent of Table 2.
5. This table is based on the following assumptions:
    - Span/deflection ratio is equal to or greater than 180.
    - For post-1960 construction, wood species and grade is Douglas Fir-Larch No. 2.
    - For pre-1960 construction, wood species and grade is Douglas Fir-Larch No. 1.
    - Other wood species and/or grade are also acceptable if allowable bending stress is equal or greater to that listed.

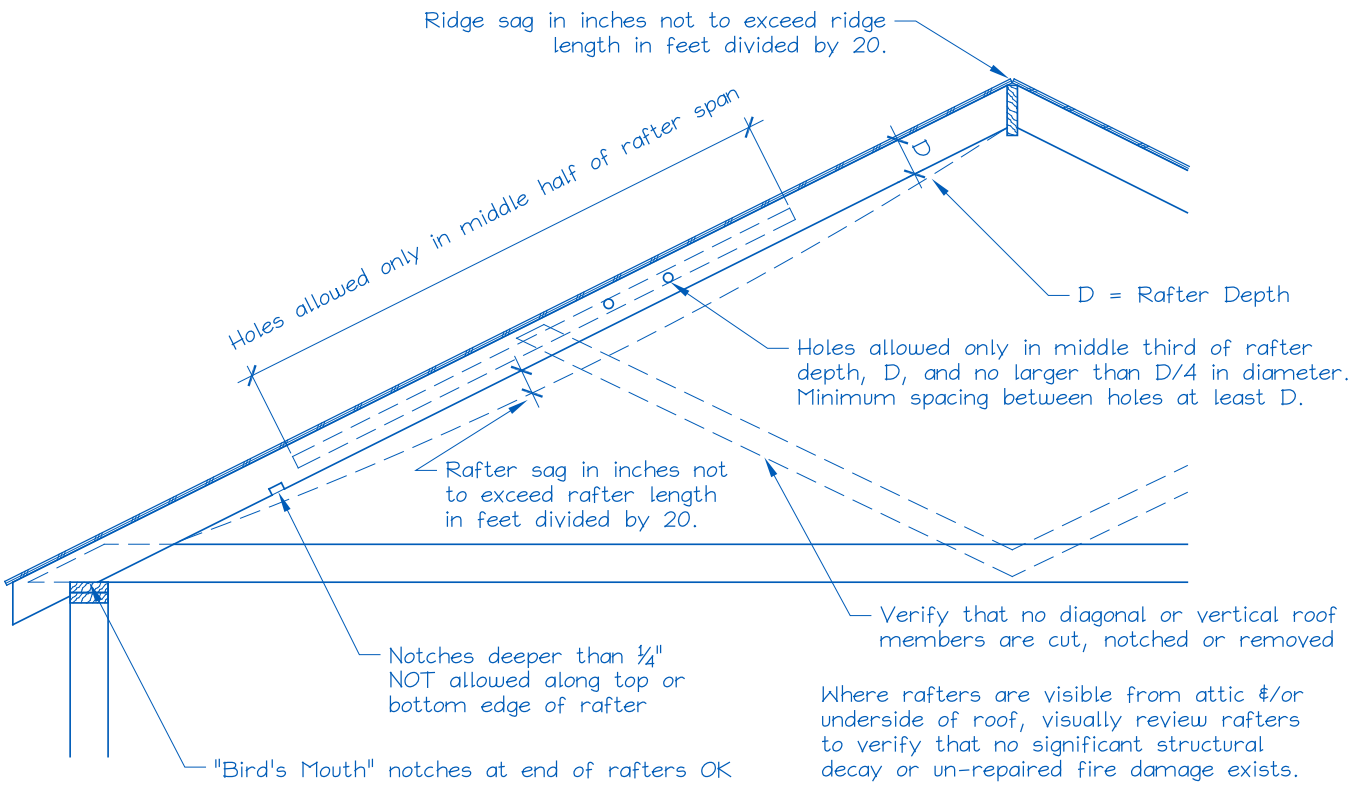

Figure 1. Roof Visual Structural Review (Contractor's Site Audit) of Existing Conditions.

The site auditor should verify the following:

6. No visually apparent disallowed rafter holes, notches and truss modifications as shown above.
7. No visually apparent structural decay or un-repaired fire damage.
8. Roof sag, measured in inches, is not more than the rafter or ridge beam length in feet divided by 20.

Rafters that fail the above criteria should not be used to support solar arrays unless they are first strengthened.

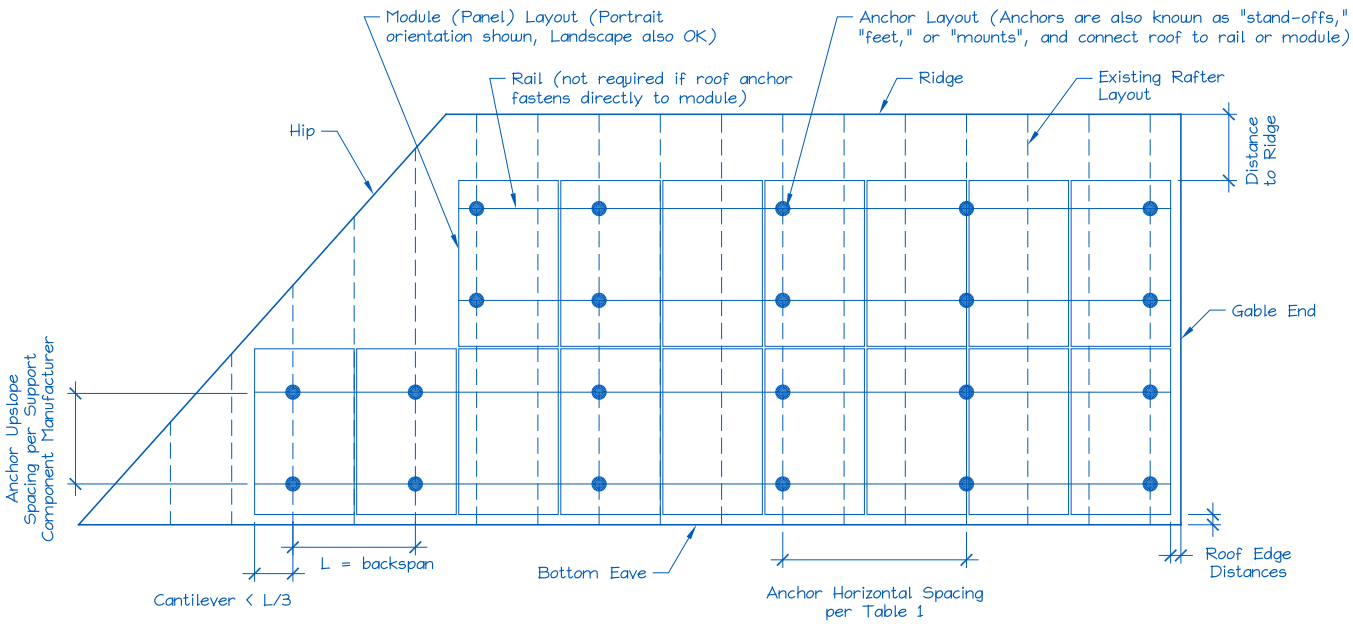

Figure 2. Sample Solar Panel Array and Anchor Layout Diagram (Roof Plan).

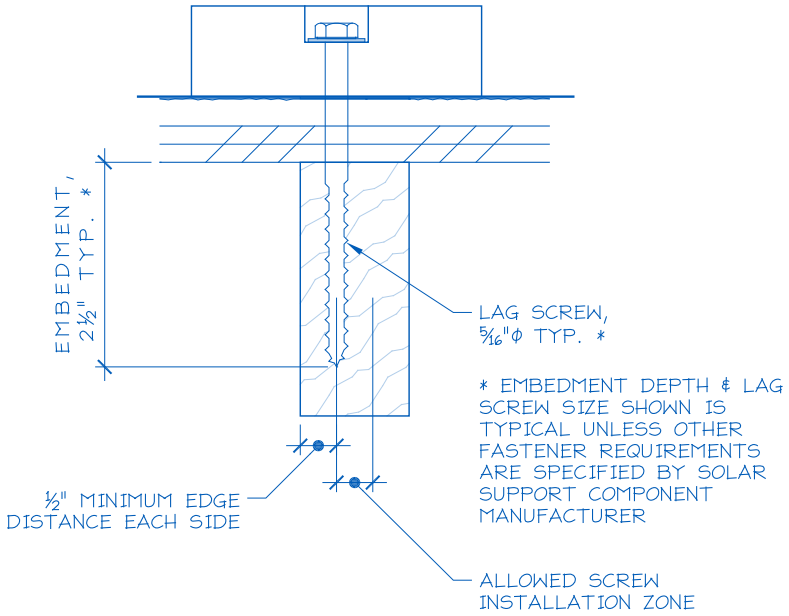

Figure 3. Typical Anchor with Lag Screw Attachment.

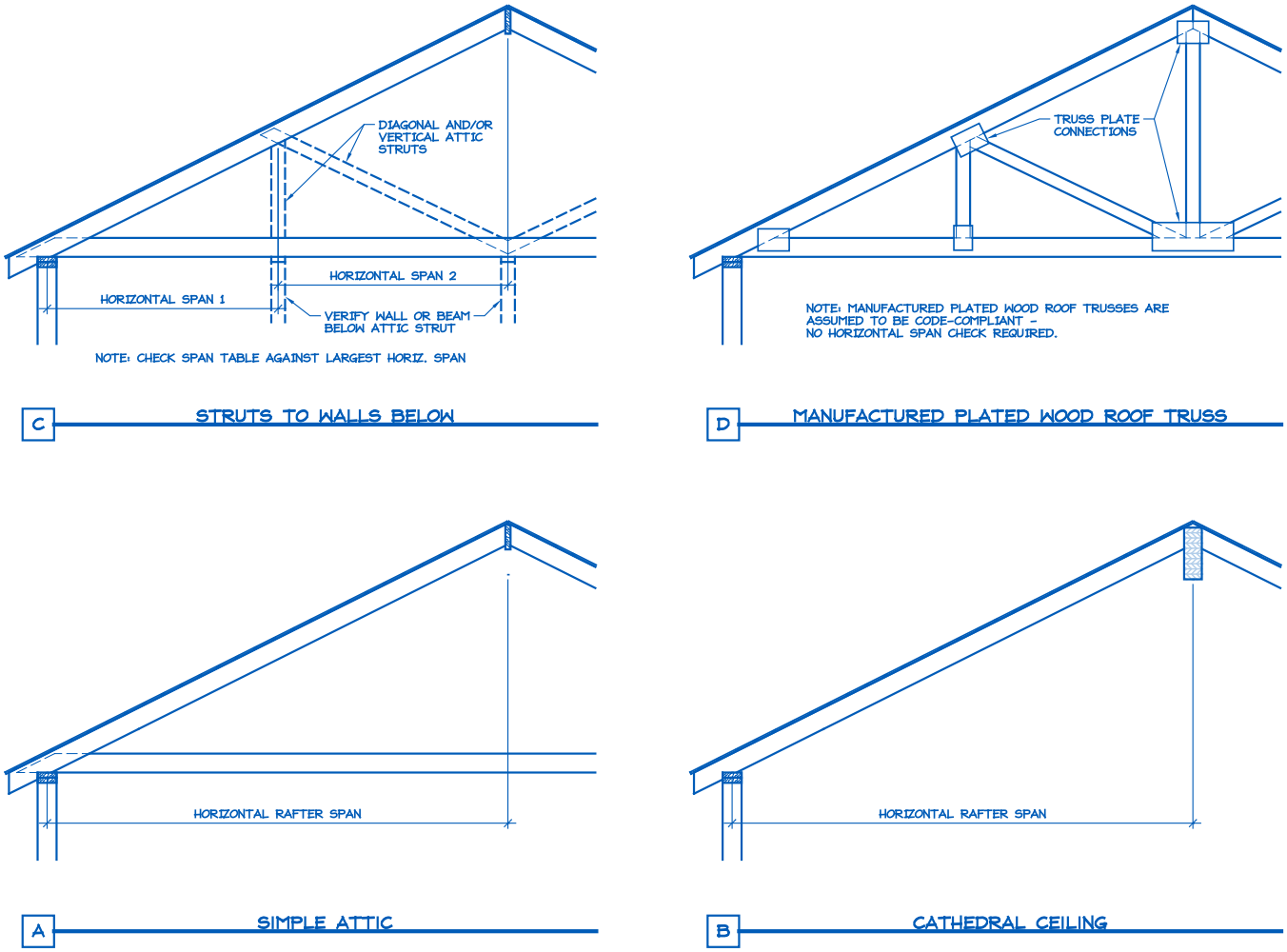

Figure 4. Definition of Rafter Horizontal Span.

Inspection Guide for PV Systems in One- and Two- Family Dwellings

(For Rooftop Photovoltaic Systems meeting the Standard Plan)

This document has two sections. Neither section is all-inclusive as this document is simply a tool to aid the inspection process.

SECTION 1 – Field Inspection Guide: The purpose of this section is to give the field inspector a single-page reminder of the most important items in a field inspection.

SECTION 2 – Comprehensive Reference: This reference details items that may be relevant in the field inspection of rooftop PV systems that comply with the comprehensive or simplified versions of the "Solar PV Standard Plan." Not all items outlined in this section are relevant to each PV system. This inspection reference details most of the issues that relate to the PV system during the inspection process.

All California Electrical Code (CEC), California Residential Code (CRC), California Building Code (CBC) and California Fire Code (CFC) references are to the 2016 versions unless otherwise noted.

SECTION 1: Field Inspection Guide for Rooftop Photovoltaic (PV) Systems Standard Plan

Make sure all PV system AC/DC disconnects and circuit breakers are in the open position and verify the following.

1. All work done in a neat and workmanlike manner (CEC 110.12).
2. PV module model number, quantity and location according to the approved plan.
3. Array mounting system and structural connections according to the approved plan.
4. Roof penetrations flashed/sealed according to the approved plan.
5. Array exposed conductors are properly secured, supported and routed to prevent physical damage.
6. Conduit installation according to CRC R324 and CEC 690.4.
7. Firefighter access according to approved plan.
8. Roof-mounted PV systems have the required fire classification (CBC 1505.9 or CRC R902.4).
9. Grounding/bonding of rack and modules according to the manufacturer's installation instructions that are approved and listed.
10. Equipment installed, listed and labeled according to the approved plan (e.g., PV modules, DC/DC converters, combiners, inverters, disconnects, load centers and electrical service equipment).
11. For grid-connected systems, inverter is marked "utility interactive."
12. For ungrounded inverters, installation complies with CEC 690.35 requirements.
13. Conductors, cables and conduit types, sizes and markings according to the approved plan.
14. Overcurrent devices are the type and size according to the approved plan.
15. Disconnects according to the approved plan and properly located as required by the CEC.
16. Inverter output circuit breaker is located at opposite end of bus from utility supply at load center and/or service panelboard (not required if the sum of the inverter and utility supply circuit breakers is less than or equal to the panelboard bus rating).
17. PV system markings, labels and signs according to the approved plan.
18. Connection of the PV system to the grounding electrode system according to the approved plan.
19. Access and working space for operation and maintenance of PV equipment such as inverters, disconnecting means and panelboards (not required for PV modules) (CEC 110.26).

SECTION 2: Comprehensive Inspection Reference

GENERAL

1. Module manufacturer, make, model and number of modules match the approved plans. (CBC 107.4)
2. DC PV modules are listed to UL 1703. Ac modules are listed to UL 1703 and UL 1741. (CEC 110.3, 690.4 & CBC 15010.7 & CRC R908)
3. Modules are attached to the mounting structure according to the manufacturer's instructions and the approved plans. (CEC 110.3[B], CBC 107.4 & CRC R908)
4. Roof penetrations/attachments are properly flashed. (CBC Chapter 15 & 2012 CRC Chapter 9)
5. Rooftop systems are designed in accordance with the CBC. (CBC 15010.7 & CRC R908)
6. Roof access points, paths and clearances need to comply with the CFC. (CFC 605.11.3.1 - 605.11.3.3.3, CRC R331.4.1 through R324)
7. PV installation shall comply with requirements of the standard plan.
8. PV system operating at 80 volts or greater shall be protected by a listed DC arc fault protection. (CEC 690.11)
9. All work done in a neat and workmanlike manner. (CEC 110.12)

ELECTRICAL REQUIREMENTS

PV Array Configuration

10. DC modules are properly marked and labeled. (CEC 110.3, 690.4[D] & 690.51)
11. AC modules are properly marked and labeled. (CEC 110.3, 690.4[D] & 690.52)
12. PV modules are in good condition (i.e., no broken glass or cells, no discoloration, frames not damaged, etc.). (CEC 110.12[B])
13. Residential one and two family dwelling limited to maximum PV system voltage of 600 volts. (CEC 690.7)

Bonding and grounding

14. A complete grounding electrode system is installed. (CEC 690.47[A] & [B])
15. Modules are bonded and grounded in accordance with the manufacturer's installation instructions, that are listed and approved, using the supplied hardware or listed equipment specified in the instructions and identified for the environment. (CEC 690.43 & 110.3[B])
16. Racking systems are bonded and grounded in accordance with the manufacturer's installation instructions, that are listed and approved, using the supplied hardware or listed equipment specified in the instructions and identified for the environment. (CEC 690.43 & 110.3[B])
17. Properly sized equipment grounding conductor is routed with the circuit conductors. (CEC 690.45, 250.134[B] & 300.3[B])
18. AC and DC grounding electrode conductors are properly connected as required by code. Separate electrodes, if used, are bonded together. (CEC 690.47, 250.50 & 250.58)

19. Bonding fittings are used on concentric/eccentric knockouts with metal conduits for circuits over 250 volts. (CEC 250.97) (see also exceptions 1 through 4)
20. Bonding fittings are used for ferrous metal conduits enclosing grounding electrode conductors. (CEC 250.64[E])

PV Source/output Circuit Conductor Management

21. Cables are secured by staples, cable ties, straps, hangers or similar fittings at intervals that do not exceed 4.5 feet. (CEC 334.30 & 338.12[A][3])
22. Cables are secured within 12 inches of each box, cabinet, conduit body or other termination. (CEC 334.30 & 338.12[A][3])
23. Cable closely follows the surface of the building finish or of the running boards. (CEC 690.4 & CFC 605.11.2 & CRC R324) NOTE: see Section 12 below for additional requirements on routing of conductors for fire fighter safety concerns.
24. Exposed single conductors, where subject to physical damage, are protected. (CEC 230.50[B] & 300.5[D])
25. Exposed single conductors used for ungrounded systems are listed and identified as “PV wire.” (CEC 690.35[D][3]) For other conductor requirements for ungrounded systems, see CEC 690.35(D).

Conductors

26. Exposed single conductor wiring is a 90°C, wet rated and sunlight resistant type USE-2 or approved/listed PV wire. (CEC 690.31[B] & 110.2) If the wiring is in a conduit, it is 90°C, wet rated type RHW-2, THWN-2, or XHHW-2. (CEC 310.15)
27. Conductor insulation is rated at 90°C to allow for operation at 70°C+ near modules. (CEC 310.15)
28. Grounded conductor is identified white or gray. (CEC 200.6)
29. Open conductors are supported, secured and protected. (CEC 338.12[A][3] & 334.30)
30. Conductors are not in contact with the roof surface. (CEC 334.30)
31. DC conductors inside a building are in a metal raceway or MC metal-clad cable that complies with 250.118(10), or metal enclosures. (CEC 690.31[E])
32. DC wiring methods shall not be installed within 25cm (10”) of the roof decking or sheathing except where directly below the roof surface covered by the PV modules and associated equipment. (CEC 690.31[E][1])
33. If more than one nominal voltage system conductor is installed in the raceway, permanent identification and labeling is required. (CEC 200.6[D] & 210.5[C])
34. For underground conductor installations, the burial depth is appropriate and warning tape is in place. (CEC 300.5[D][3] & Table 300.5)
35. Aluminum is not placed in direct contact with concrete. (CEC 250.120[B] & 110.11)
36. PV circuit and premises wiring is separated. (CEC 690.4[B])
37. PV system conductors shall be grouped and identified. (CEC 690.4[B])

Overcurrent Protection

38. Overcurrent protection devices (OCPD) in the DC circuits are listed for DC operation. (CEC 110.3[A], [B] & 690.9[D])
39. Overcurrent protection devices shall be provided per the approved plans. (CEC 690.9[A])
40. Combiner box is listed to UL 1741.
41. PV output OCPD is located at the opposite end of the bus from the feeder connection, unless otherwise approved. (CEC 705.12[D][2])

Electrical Connections

42. Crimp terminals are listed and installed using a listed tool specified for use in crimping those specific crimps. (CEC 110.3[B] & 110.14)
43. Pressure terminals are listed for the environment and tightened to manufacturer recommended torque specifications. (CEC 110.11, 110.3[B] & 110.14)
44. Connectors are listed for the voltage of the system and have appropriate temperature and ampere ratings. (CEC 110.3[B] & 110.14)
45. Twist-on wire connectors are listed for the environment (i.e., wet, damp, direct burial, etc.) and installed per manufacturer's instructions. (CEC 110.11, 110.3[B], 110.14 & 300.5[B])
46. Power distribution blocks are listed. (CEC 690.4 & 2014 NEC 314.28[E])
47. Terminals containing more than one conductor are listed for multiple conductors. (CEC 110.14[A] & 110.3[B])
48. Connectors and terminals used other than class B and C stranded conductors (fine stranded conductors) are listed and identified for use with specific conductor class or classes.. (CEC 110.14[A] & 110.3[B])
49. Connectors that are readily accessible and operating at over 30 volts require a tool for opening. (CEC 690.33[C])
50. All connectors are fully engages, tight and secure. (CEC 110.3[B] & 110.12)
51. Wiring and connections of inverters, PV source circuits, etc., and all interconnections are performed by qualified personnel. (CEC 690.4)

Disconnects

52. Disconnects used in DC circuits are listed for DC operation and located as allowed by the AHJ. (CEC 110.3)
53. Disconnects are installed for all current carrying conductors of the PV source. (CEC 690.13 - 690.15 & 690.35)
54. Disconnects are installed for the PV equipment. NOTE: For inverters and other equipment that are energized from more than one source, the disconnecting means must be grouped and identified per AHJ's requirements. (CEC 690.15)
55. Disconnects and overcurrent protection are installed for all ungrounded conductors in ungrounded PV power systems. (CEC 240.15 & 690.35)
56. Where connectors are used as disconnecting means, they shall be used in accordance with CEC 690.33.E (CEC 690.33.E & 690.17)

Inverters

57. Inverters are listed to UL 1741. (CEC 690.4[D]) NOTE: grid-tied system inverters need to be identified for use in interactive power systems.
58. Point of connection is at a dedicated breaker or disconnect. (CEC 705.12[D][1])
59. Where a back-fed breaker is used as a utility interconnection means, the breaker is not marked “line and load.” (CEC 110.3[B], 705.12[D][5])
60. Listed AC and DC disconnects and overcurrent protection are grouped and identified. (CEC 690.15)
61. No multiwire branch circuits are installed where single 120-volt inverters are connected to 120/240-volt load centers. (CEC 690.10[C])
62. The barrier is reinstalled between the AC, DC wiring and communication wires. (CEC 110.3[B] & 110.27)

Signs and Labels

63. All interior and exterior DC conduit, enclosures, raceways, cable assemblies, junction boxes, combiner boxes and disconnects are marked. (CFC 605.11.1, CEC 690.31[E], 690.17 & 690.53 & CRC R324)
64. The markings on the conduits, raceways and cable assemblies are every 10 feet, within one foot of all turns or bends and within one foot above and below all penetrations of roof/ceiling assemblies, walls and barriers. (CFC 605.11.1.4, CEC 690.31[E])
65. Marking is placed adjacent to the main service disconnect in a location clearly visible from where the disconnect is operated. (CFC 605.11.1.3 & CRC R324)
66. The markings say “WARNING: PHOTOVOLTAIC POWER SOURCE” and have 3/8-inch minimum-sized white letters on a red background. The signs are made of reflective weather resistant material. (CFC 605.11.1.1, 605.11.1.2& CRC R324 & 690.31)
67. Where PV circuits are embedded in built-up, laminate or membrane roofing materials in roof areas not covered by PV modules and associated equipment, the location of circuits shall be clearly marked. (CEC 690.4)
68. Required labels shall be permanent and suitable for the environment. The following labels are required as applicable.

Table 1 - Signage Requirements for PV systems		
Code Section	Location of Label	Text
CEC 690.5(C)	Utility-interactive inverter & battery enclosure	WARNING: ELECTRIC SHOCK HAZARD IF A GROUND FAULT IS INDICATED, NORMALLY GROUNDED CONDUCTORS MAY BE UNGROUNDED AND ENERGIZED
CEC 690.35(F)	All enclosures with ungrounded circuits or devices which are energized and may be exposed during service	WARNING: ELECTRIC SHOCK HAZARD. THE DC CONDUCTORS OF THIS PHOTOVOLTAIC SYSTEM ARE UNGROUNDED AND MAY BE ENERGIZED.
CEC 690.13 - 690.31	On the main service when DC wiring is run through the building and the DC disconnect is located other than at the main service	DC DISCONNECT IS LOCATED….
CEC 690.13 - 690.31	On the AC and DC disconnects	PHOTOVOLTAIC SYSTEM DISCONNECT
CEC 690.53	On the DC disconnects	OPERATING CURRENT ___ OPERATING VOLTAGE ___ MAXIMUM SYSTEM VOLTAGE ___ SHORT CIRCUIT CURRENT ___
CEC 690.54	At interactive points of interconnection, usually the main service	RATED AC OUTPUT CURRENT _____ AMPS NORMAL OPERATING AC VOLTAGE _____ VOLTS
CEC 690.56(B)/ 690.13 - 690.31, 705.10 2016 CEC 690.4(D)	At the electrical service and at the PV inverter if not at the same location	A directory providing the location of the service disconnecting means and the photovoltaic system disconnecting means
CEC 690.17	On the DC disconnect and on any equipment that stays energized in the off position from the PV supply	WARNING! ELECTRIC SHOCK HAZARD. DO NOT TOUCH TERMINALS. TERMINALS ON BOTH THE LINE AND LOAD SIDES MAY BE ENERGIZED IN THE OPEN POSITION.
CEC 705.12 (D)(7)	Inverter output OCPD	WARNING: INVERTER OUTPUT CONNECTION DO NOT RELOCATE THIS OVERCURRENT DEVICE.
CFC 605.11.1.4, CEC 690.31(E)(3), 690.31(E)(4), CRC R324	On conduit, raceways and enclosures, mark every 10 feet, at turns, above/below penetrations	WARNING: PHOTOVOLTAIC POWER SOURCE. *Note: This label shall have a red background with white lettering*

FIRE SAFETY REQUIREMENTS

1. All roofs have an access point that does not place ground ladders over openings such as windows or doors, are located at strong points of building construction, and in locations where the access point does not conflict with overhead obstructions such as tree limbs, wires, or signs. (CFC 605.11.1.1)
2. Size of Solar photovoltaic array: Each PV array shall be limited to 150 feet by 150 feet. Multiple arrays shall be separated by a 3-foot-wide clear access pathway. (CFC 605.11.1.2.1)
3. Hip Roofs: Panels and modules are located so that there is a 3-foot wide clear access pathway from the eave to the ridge on each roof slope where panels and modules are located. (CFC 605.11.1.2.2)
4. Access pathways are located at a structurally sound location capable of supporting the load of fire fighters accessing the roof. (CFC 605.11.1.2.2)
5. Single Ridge Roofs: Panels and modules are located so that there are two, 3-foot wide access pathways from the eave to the ridge on each roof slope where panels and modules are located. (CFC 605.11.1.2.3)
6. Roofs with slopes greater than 2:12 or less have solar panel layouts with access pathways that comply with approved roof plan meet the criteria for exception. (CFC 605.11.1.2.2, 605.11.1.2.3, 605.11.1.2.4)
7. Hips and Valleys: If Panels and modules are placed on both sides of a hip or valleys they will not be closer than 18 inches to a hip or valley. If the panels are located on only one side of a hip or valley that is of equal length, then the panels can be placed directly adjacent to the hip or valley. (CFC 605.11.1.2.4)
8. Smoke Ventilation: Panels and modules are located no higher than 3 feet from the top of the ridge in order to allow for fire department smoke ventilation operations. (CFC 605.11.1.2.5)
9. Conduit, wiring systems and raceways for photovoltaic circuits are located as close as possible to the ridge, hip or valley and from the hip or valley as directly as possible to an outside wall to reduce trip hazards and maximize ventilation opportunities. (CFC 605.11.1.2.6)
10. Conduit runs between sub arrays and to DC combiner boxes are installed in a manner that minimizes total amount of conduit on the roof by taking the shortest path from the array to the DC combiner box. (CFC 605.11.1.2.6)
11. DC Combiner Boxes are located so that conduit runs are minimized in the pathways between arrays. (CFC 605.11.1.2.6)
12. DC wiring in enclosed spaces in buildings is installed in metallic conduit or raceways. Conduit runs along the bottom of load bearing members. (CFC 605.11.1.2.6)
13. Ground-mounted PV arrays: A clear, brush-free area of 10 feet will be required for ground-mounted PV arrays. (CFC 605.11.2)
14. Abandoned wiring: Accessible portions of abandoned cables in air-handling plenums will be removed. (CFC 605.12)